EM

REMOVAL

1. REMOVE MANUAL TRANSAXLE ASSEMBLY (for Manual Transaxle)

(a) Remove the manual transaxle assembly (See page MX-19).

2. REMOVE AUTOMATIC TRANSAXLE ASSEMBLY

(a) Remove the automatic transaxle assembly (See page AX-125).

3. REMOVE CLUTCH COVER ASSEMBLY (for Manual Transaxle)

(a) Remove the clutch cover assembly (See page CL-18).

4. REMOVE CLUTCH DISC ASSEMBLY (for Manual Transaxle)

(a) Remove the clutch disc assembly (See page CL-18).

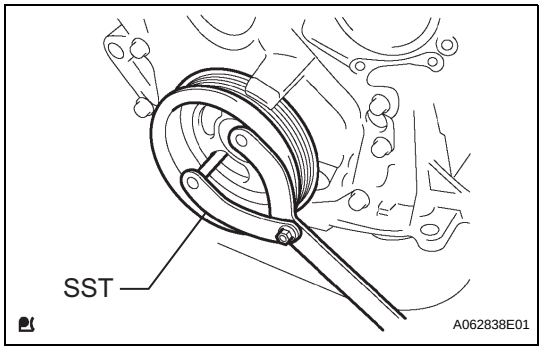

5. REMOVE FLYWHEEL SUB-ASSEMBLY (for Manual Transaxle)

(a) Using SST, hold the crankshaft.
SST 09960-10010 (09962-01000, 09963-01000)

(b) Remove the 8 bolts and flywheel.

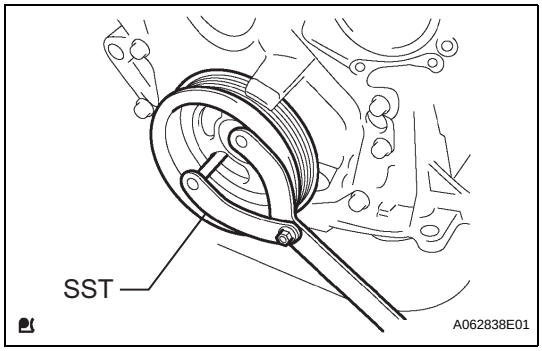

6. REMOVE DRIVE PLATE & RING GEAR SUB-ASSEMBLY (for Automatic Transaxle)

(a) Using SST, hold the crankshaft.
SST 09960-10010 (09962-01000, 09963-01000)

(b) Remove the 8 bolts and drive plate & ring gear.

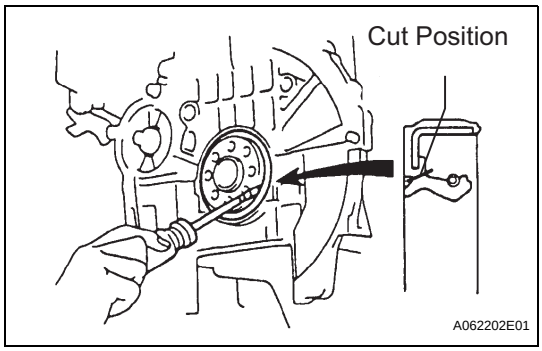

7. REMOVE ENGINE REAR OIL SEAL

(a) Using a knife, cut off the oil seal lip.

(b) Using a screwdriver with its tip wrapped with tape, pry out the oil seal.

NOTICE:
After removing, check the crankshaft for damage. If damaged, smooth the surface with 400-grit sandpaper.

INSTALLATION

1. INSTALL ENGINE REAR OIL SEAL

(a) Apply multi-purpose grease to a new oil seal lip.
NOTICE:
Keep the lip free of foreign objects.

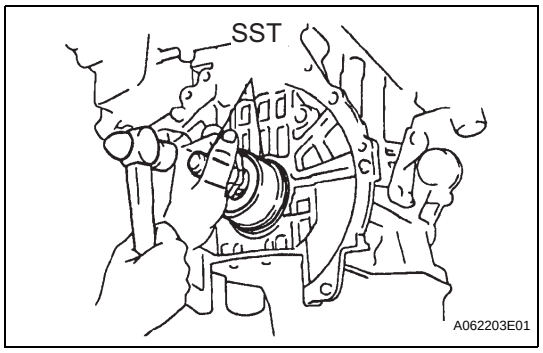

(b) Using SST and a hammer, tap the new oil seal in until its surface is flush with the rear oil seal retainer edge.
SST 09223-15020, 09950-70010 (09951-07100)
NOTICE:
- **Tap the oil seal in a vertical position.**
- **Wipe off extra grease on the crankshaft.**

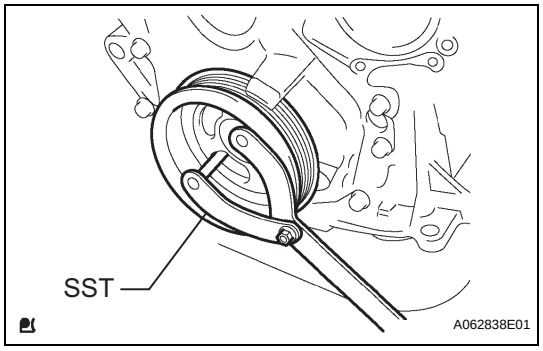

2. INSTALL DRIVE PLATE & RING GEAR SUB-ASSEMBLY (for Automatic Transaxle)

(a) Using SST, hold the crankshaft.
SST 09960-10010 (09962-01000, 09963-01000)

(b) Clean the 8 bolts and 8 bolt holes.

(c) Apply adhesive to 2 or 3 threads of the 8 bolts.
Adhesive:
Toyota Genuine Adhesive 1324, Three Bond 1324 or equivalent

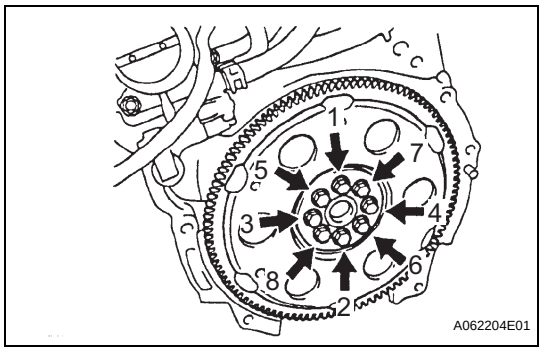

(d) Using several steps, install and tighten the 8 bolts uniformly in the sequence shown in the illustration.
Torque: 88 N*m (897 kgf*cm, 65 ft.*lbf)

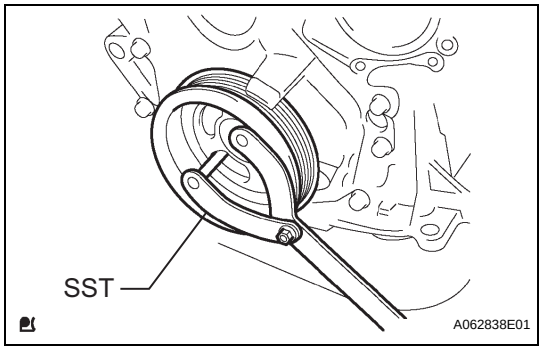

3. INSTALL FLYWHEEL SUB-ASSEMBLY (for Manual Transaxle)

(a) Using SST, hold the crankshaft.
SST 09960-10010 (09962-01000, 09963-01000)

(b) Clean the 8 bolts and 8 bolt holes.

(c) Apply adhesive to 2 or 3 threads of the 8 bolts.
Adhesive:
Toyota Genuine Adhesive 1324, Three Bond 1324 or equivalent

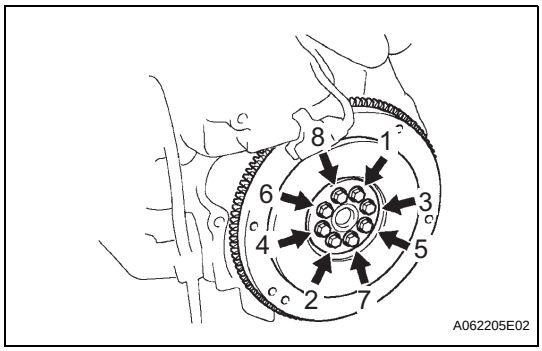

(d) Using several steps, uniformly install and tighten the 8 bolts in the sequence shown in the illustration (Procedure "A").
Torque: 49 N*m (500 kgf*cm, 36 ft.*lbf)

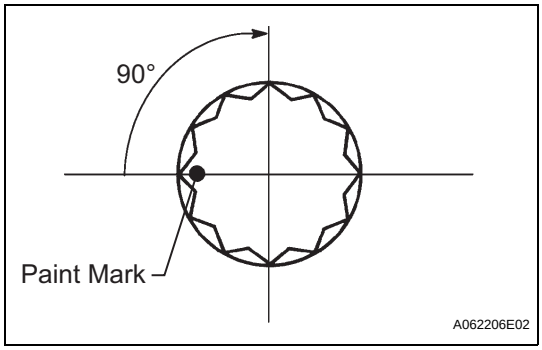

(e) Mark the bolts with paint as shown in the illustration.
(f) Retighten the bolts 90° in the same sequence as procedure "A".
(g) Check that the paint marks of each bolt are at a 90° angle from the original position.

4. INSTALL CLUTCH DISC ASSEMBLY (for Manual Transaxle)
(a) Install the clutch disc assembly (See page CL-19).
SST 09301-00210

5. INSTALL CLUTCH COVER ASSEMBLY (for Manual Transaxle)
(a) Install the clutch cover assembly (See page CL-19).

6. INSTALL MANUAL TRANSAXLE ASSEMBLY (for Manual Transaxle)
(a) Install the manual transaxle assembly (See page MX-23).

7. INSTALL AUTOMATIC TRANSAXLE ASSEMBLY
(a) Install the automatic transaxle assembly (See page AX-130).

EM